EMMERT

ROTO-VISE

BULLETIN NO. 125

The vise that holds work securely in any position!

EMMERT MANUFACTURING COMPANY
WAYNESBORO • PENNSYLVANIA

MANUFACTURERS OF WOOD WORKERS, SHEET METAL, PATTERN MAKERS AND MACHINISTS BENCH VISES

A GRIP OF IRON . . . YET AS

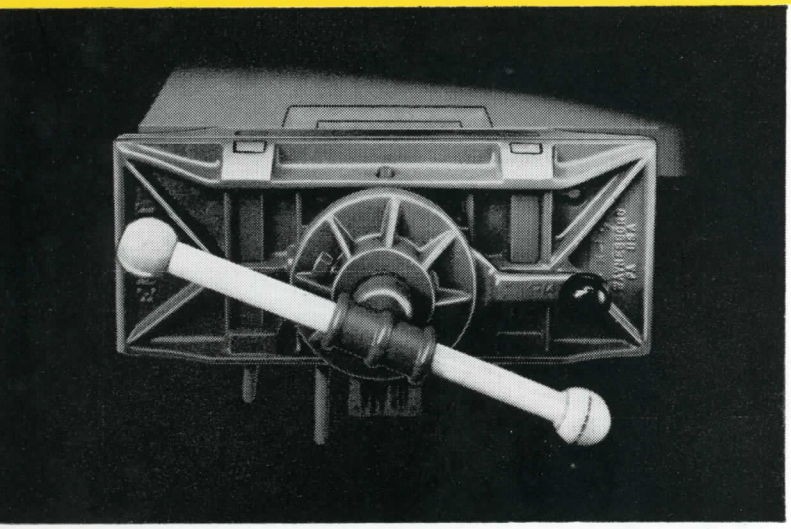

Normal position of ROTO-VISE, generally used to hold all simple rectangular shapes.

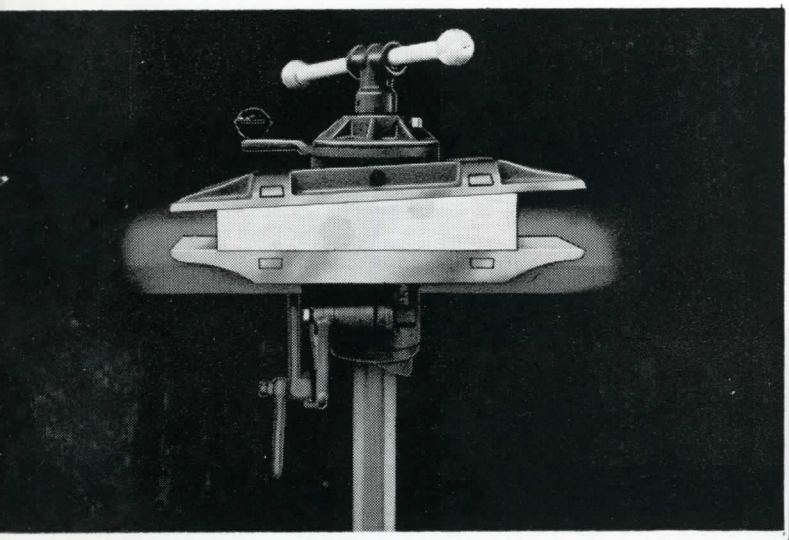

ROTO-VISE in upright position holding wedge shaped work at bench level.

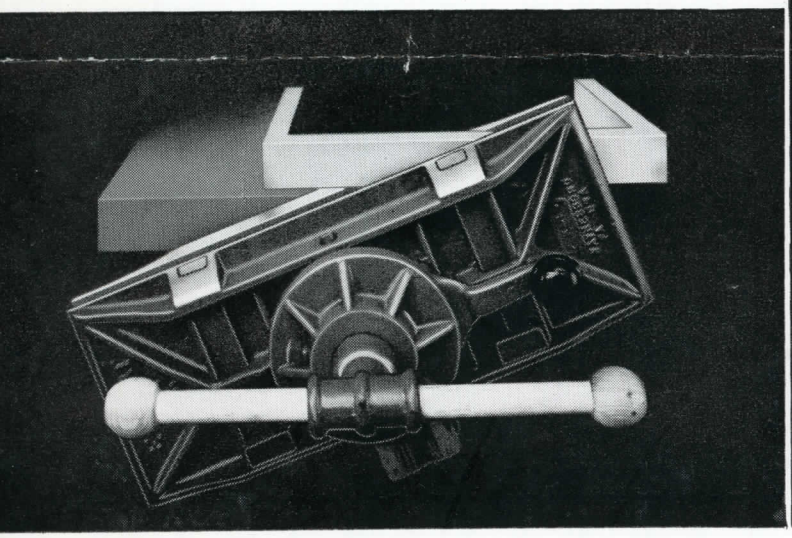

Jaws slightly rotated for holding boxes or drawers, etc., above or resting on bench top.

First the right type of jaw to most effectively hold the work — then the most efficient positioning of the work.

The Emmert ROTO-VISE successfully meets these exacting demands. No other vise will provide the operator with such a wide selection of holding jaws and yet permit him to place his work in a position best suited to his needs.

The ROTO-VISE is ideally suited for wood workers, pattern makers and sheet metal workers. It will securely hold all classes of work and can be quickly and easily adjusted to literally hundreds of positions. Perpendicularly the ROTO-VISE can be set at any point within a 90 degree arc and the jaws rotated a full 360 degrees. It may be locked at any desired point without loosening the work in the jaws. No matter how awkward the object held, it is possible to set the vise in a position offering the greatest ease to the operator. Certainly it becomes immediately apparent the Emmert ROTO-VISE will effect tremendous savings in time, material and worker fatigue. It is inevitable that production will increase in quality as well as quantity when shops are equipped with Emmert ROTO-VISES.

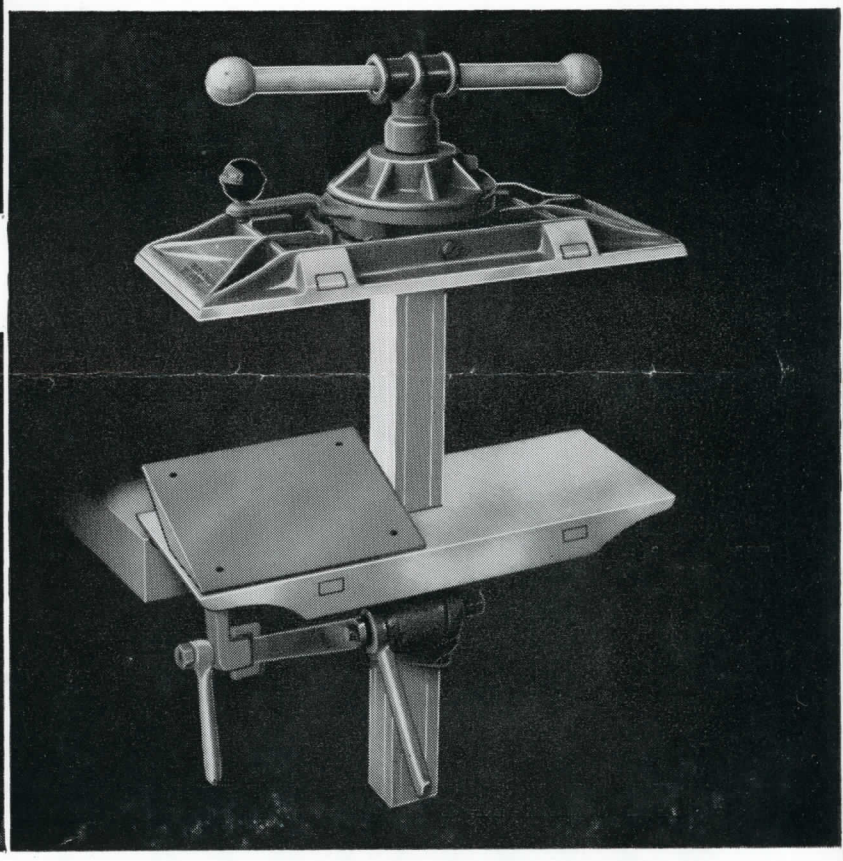

Upright position with self-adjusting jaw to hold tapers or irregular work at right angles to the vise jaw.

ROTO-VISES are so sturdily made they are practically indestructible. The special web construction of the jaws gives greater strength and completely eliminates springing. The locks for the various positionings securely hold without slipping.

Wedge shaped work will fit either end of the vise jaw as they are made to swing, pivoted at the center. The angle of the wedge may be locked for production work, eliminating the need for resetting. Each jaw of the No. 1 Vise has a 7″ x 8″ area clear of the vise beam — the No. 2 Vise a 5″ x 6″ area. One pair of jaws have button-hole openings which may be used to hold various shaped wooden pads and a small square opening to accept the ROTO-VISE'S self-adjusting jaw for taper or irregular work. The Emmert ROTO-VISE is easy and quick to set in any position and has an opening capacity of 15 inches.

The accompanying illustrations picture just a few of the ROTO-VISE'S applications, users are constantly discovering that it meets all their demands, new or old. We are confident it will successfully meet your demands, too. Write today and learn how this unusually versatile tool can help you. Emmert ROTO-VISES are fully guaranteed in every respect.

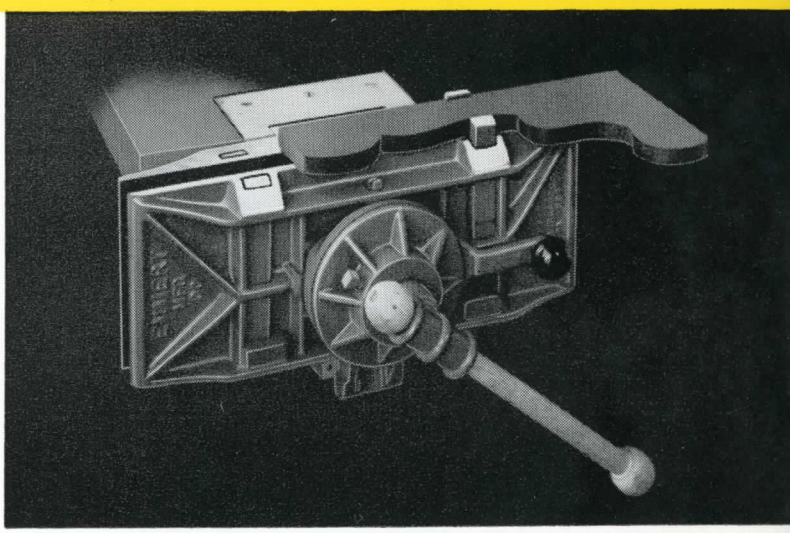

Holding unusual shapes with the vise dogs. Either end of the jaw may be used, offering a flat or round holding surface.

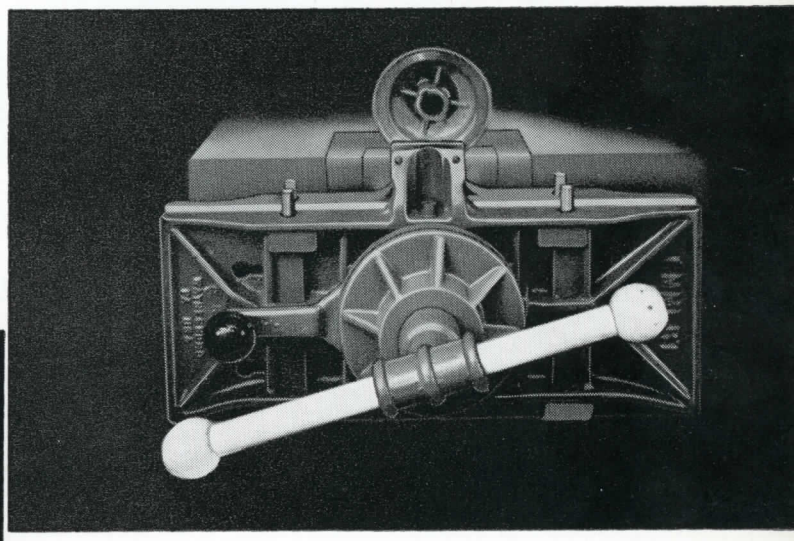

Auxiliary, steel-faced jaws holding unusual and hard to grip work.

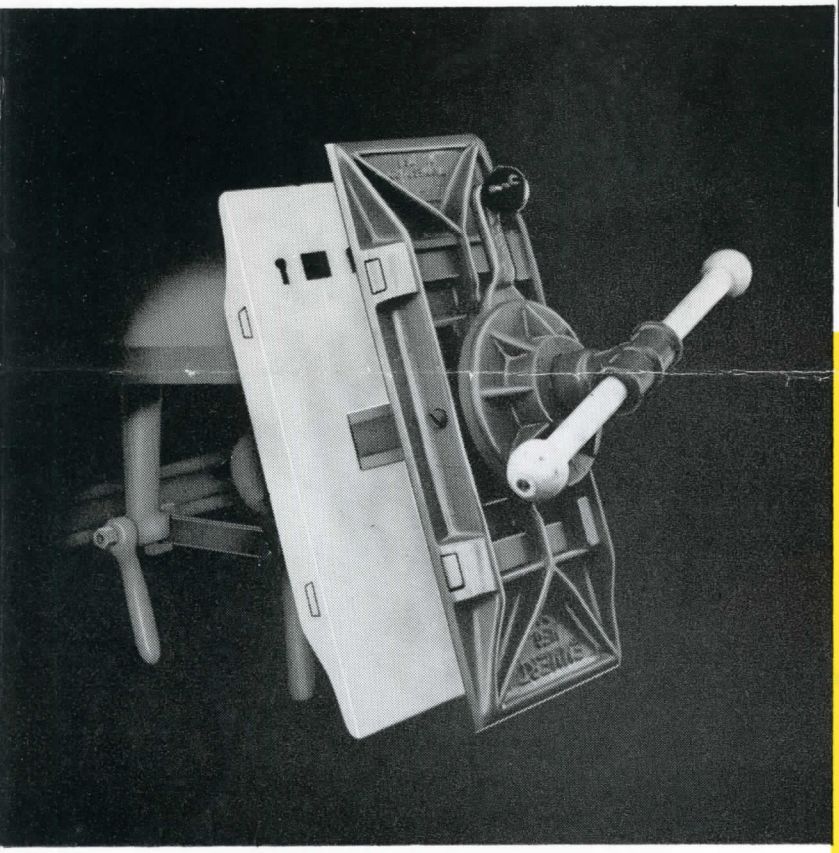

Vise in position to hold work above or below the bench level taking advantage of the jaw's maximum holding surface.

SIZES AND PRICES

EMMERT ROTO-VISES

VISE NO.	SIZE OF JAW	OPENS	WEIGHT	LIST PRICE
1	7″ x 18″	15″	86 lbs.	[redacted] $97.00
2	5″ x 14″	12″	56 lbs.	[redacted] $78.00

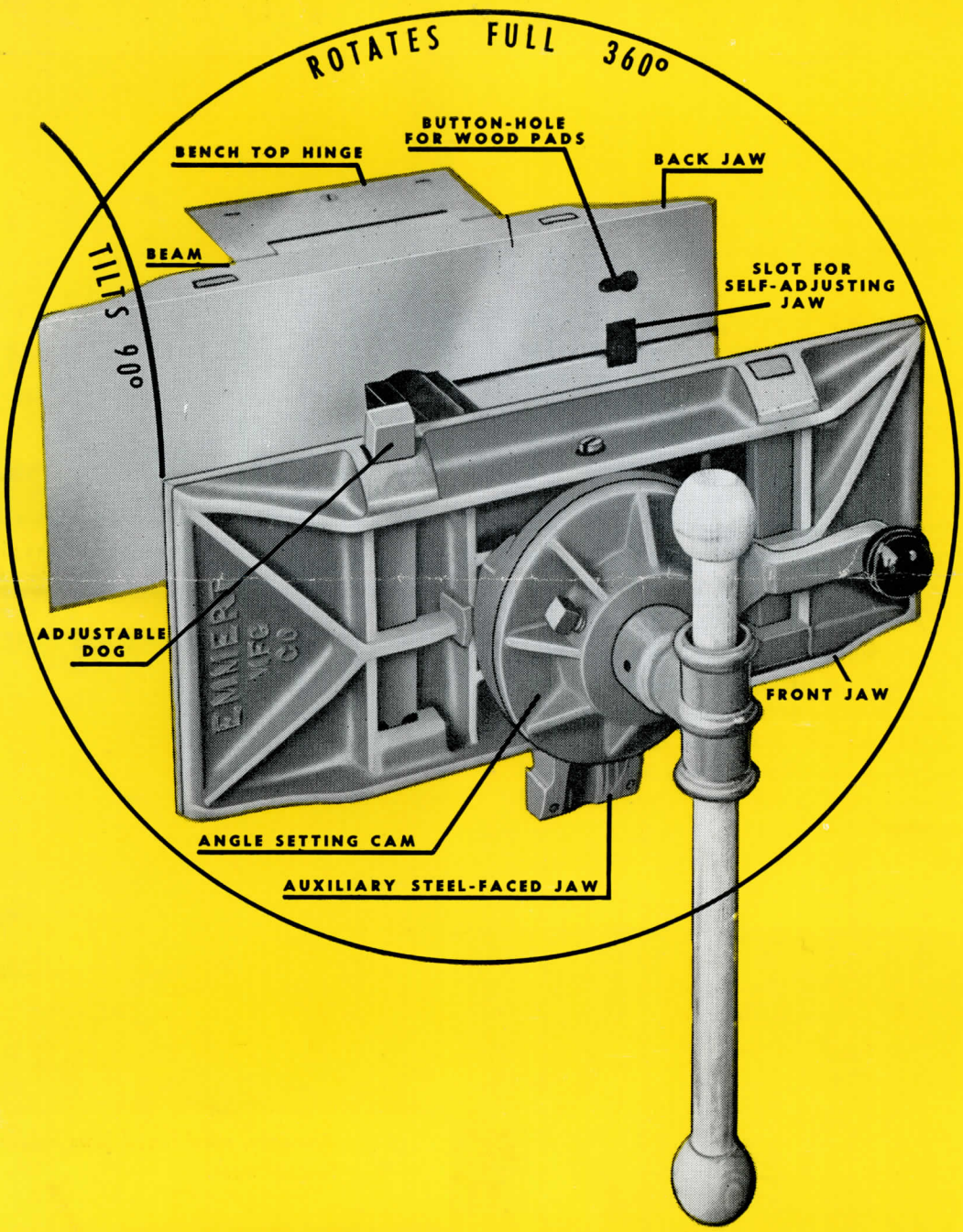

DISTRIBUTED BY

PRINTED IN U. S. A.

EMMERT MANUFACTURING COMPANY
WAYNESBORO • PENNSYLVANIA

EMMERT MFG. CO.

Pattern Makers' and Wood Workers' Universal Vises

"EMMERT"
VERTICAL OR HORIZONTAL DRAFTING MACHINES
ADJUSTABLE DRAWING FRAMES
ADJUSTABLE DRAWING BOARDS
UNIVERSAL DRAWING OUTFITS

WAYNESBORO, PA.

November 30, 1961

Modi Upholstery Shoppe
608 Fairmont Ave.
Fairmont, W. Va.

Dear Mr. Modi:

We are enclosing literature on the Emmert Roto-Vises as requested in your letter of November 27th.

If you have any questions after reviewing the enclosed, please do not hesitate to write us.

Very truly yours,

EMMERT MFG. COMPANY

A. B. Sollenberger

A. B. Sollenberger
President

ABS:nms

Encl: #125

EMMERT MFG. CO.

Pattern Makers and Wood Workers Universal Saws

"EMMERT"
VERTICAL OR HORIZONTAL DRAFTING MACHINES
ADJUSTABLE DRAWING FRAMES
ADJUSTABLE DRAWING BOARDS
UNIVERSAL DRAWING SUPPLIES

WAYNESBORO, PA.

November 30, 1961

Modi Upholstery Shoppe
608 Fairmont Ave.
Fairmont, W. Va.

Dear Mr. Modi:

We are enclosing literature on the Emmert Roto-Vises as requested in your letter of November 27th.

If you have any questions after reviewing the enclosed, please do not hesitate to write us.

Very truly yours,

EMMERT MFG. COMPANY

A. B. Ollenbarger
President

ABO:rms

Encl: 4-12C

EMMERT MFG. CO.

Pattern Makers' and Wood Workers' Universal Vises

"EMMERT"
VERTICAL OR HORIZONTAL DRAFTING MACHINES
ADJUSTABLE DRAWING FRAMES
ADJUSTABLE DRAWING BOARDS
UNIVERSAL DRAWING OUTFITS

WAYNESBORO, PA.

December 6, 1961

Modi Upholstery Shoppe
608 Fairmont Ave.
Fairmont, W. Va.

Dear Mr. Modi:

In answer to your letter of December 4th, we are pleased to quote as follows:

1 - #2 Emmert Roto-Vise	-	$78.00
Disc. 10%		7.80
		$70.20

Delivery of this vise is approximately 10 days after receipt of order.

If you should decide to order this vise, it would be appreciated if you would enclose your check in the above amount with the order.

If there are any questions, please feel free to call on us.

Very truly yours,

EMMERT MFG. COMPANY

A. B. Sollenberger
President

ABS:nms

December 6, 1961

Mack Upholstery Shoppe
608 Fairmont Ave.
Fairmont, W. Va.

Dear Mr. Mack:

In answer to your letter of December 4th, we are pleased to quote as follows:

1 - #2 Emmert Auto-Vise	-	$72.00
Disc. 10%		7.20
		$64.80

Delivery of this vise is approximately 10 days after receipt of order.

If you should decide to order this vise, it would be appreciated if you would enclose your check in the proper amount with the order.

If there are any questions, please feel free to call on us.

Very truly yours,

EMMERT MFG. COMPANY

A. B. Dollenberger
President

ABD:mms